SOLATUBE 330 DS-C
(21 IN / 530 MM)
CURB CAP
HARD CEILING

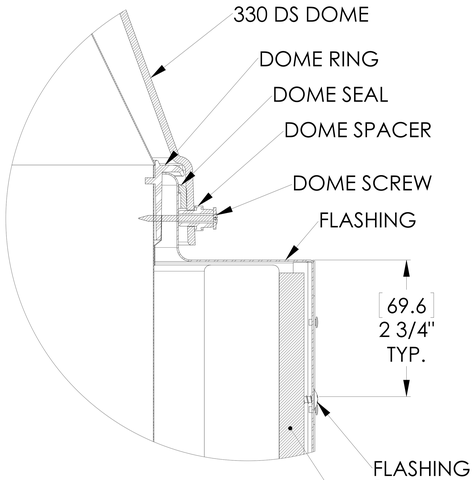

DETAIL A
SCALE 3 : 1

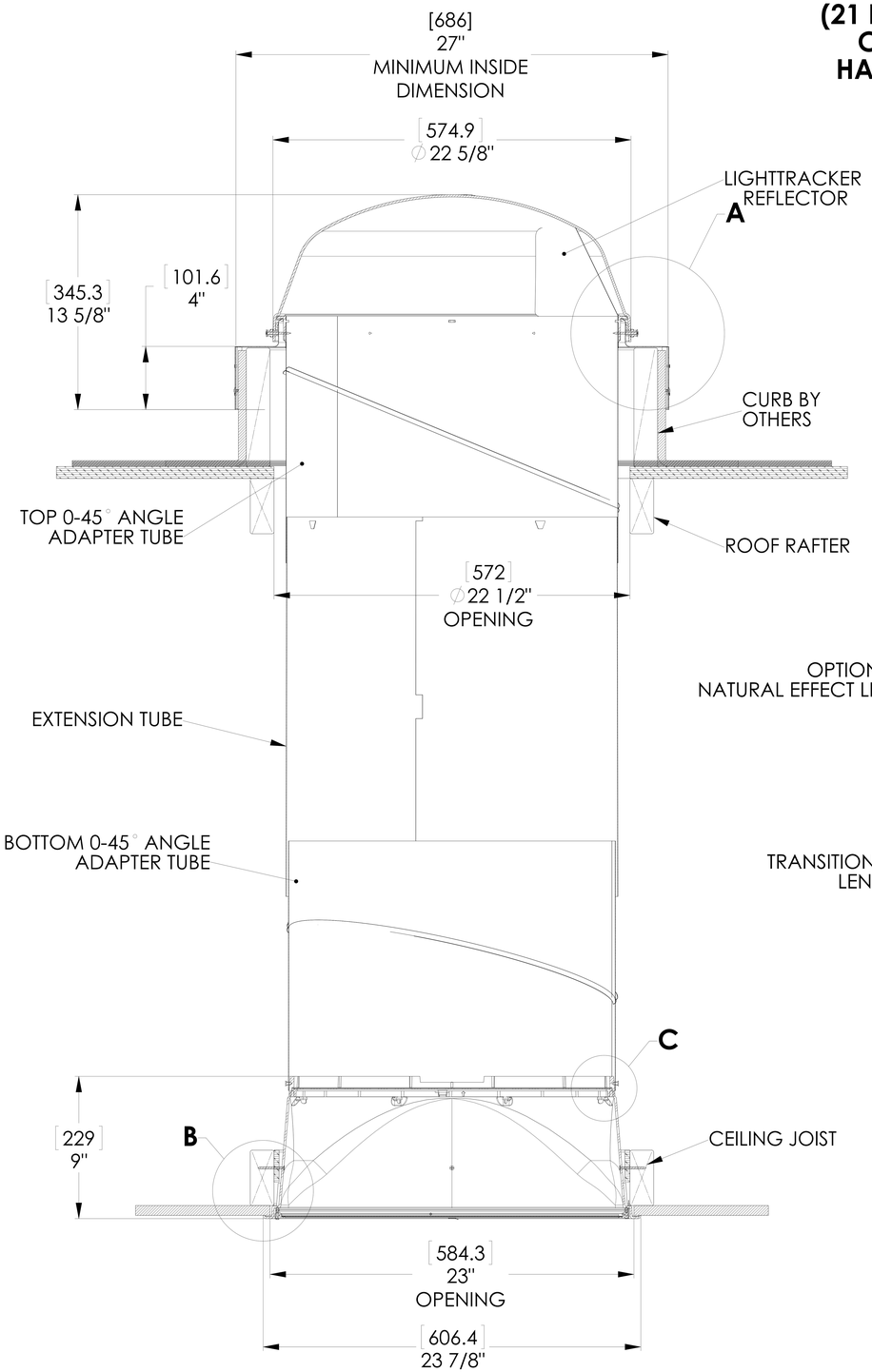

FULL SECTION
SCALE 1:1

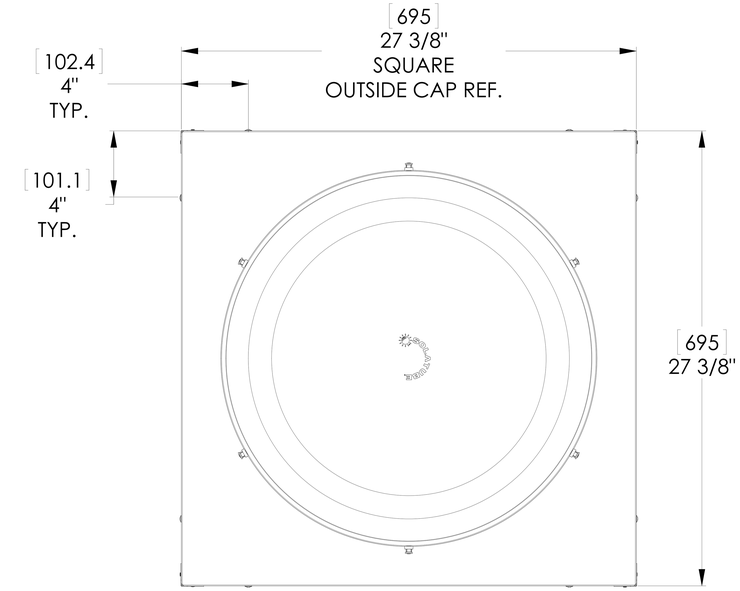

TOP VIEW
SCALE 1:1

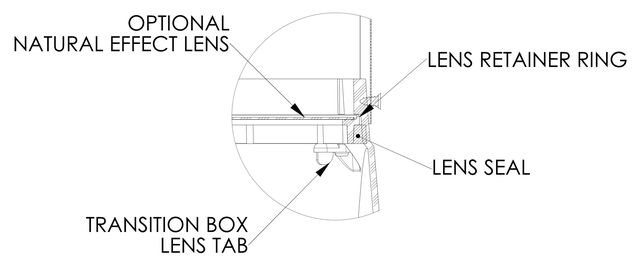

DETAIL C
SCALE 3 : 1

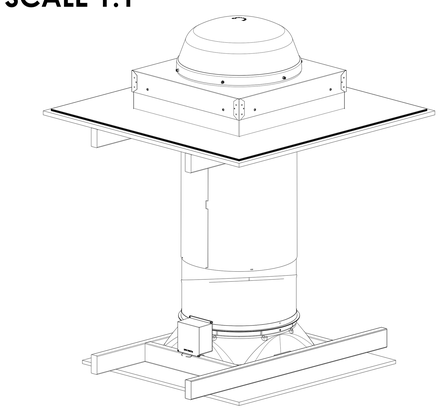

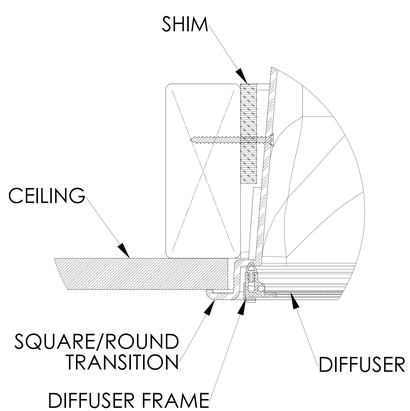

DETAIL B
SCALE 3 : 1

NOTES:

1. STRUCTURAL ELEMENTS (PLYWOOD, RAFTERS, DRYWALL ETC.) BY OTHERS & SHOWN FOR REFERENCE ONLY.
2. ALL TUBE JOINTS & SEAMS TAPED WITH 2" FOIL TAPE (NOT SHOWN).
3. DIMENSIONS IN BRACKETS ARE METRIC UNLESS OTHERWISE SPECIFIED.
4. 6" MIN CLEARANCE SHOULD BE MAINTAINED FROM ALL SOLATUBE COMPONENTS AND OTHER PLENUM COMPONENTS.

UNLESS OTHERWISE SPECIFIED: DIMENSION TOLERANCE FRACTIONS ± 1/4" INCH .X ± .1 .XX ± .06 MILLIMETER [.X] ± 2.5 [.XX] ± 1.5	SOLATUBE INTERNATIONAL, INC. COPYRIGHT 2013 WWW.SOLATUBE.COM	SOLATUBE 2210 OAK RIDGE WAY VISTA, CALIFORNIA 92081-8341 PH (760) 597-4400	
MATERIAL -- --	DRAWN BY STEVENS	DATE 7/1/08	TITLE: 330 DS-C CURB CAP HARD CEILING
FINISH --	CHECKED BY --	DATE --	SIZE D / DWG. NO. WEB-330-CF-HC / REV 3
DO NOT SCALE DRAWING	APPROVED BY --	DATE --	SCALE: 1:1 / SHEET 1 OF 1