SOLATUBE M74 DS
(29 IN / 740 MM)
CURB CAP/DAYLIGHT DIMMER
OPEN CEILING

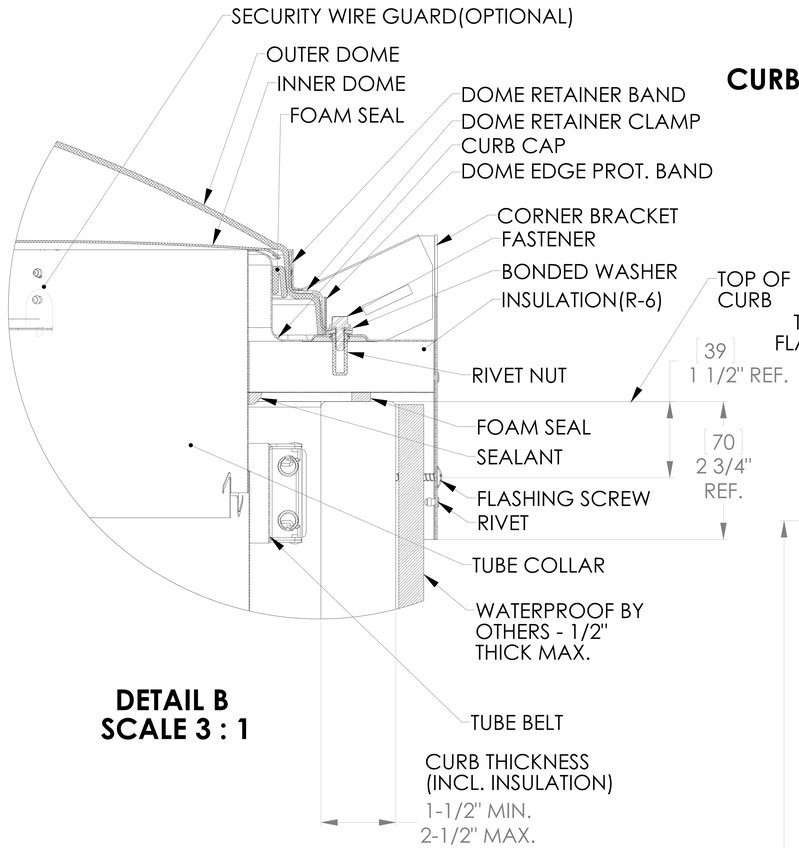

DETAIL B
SCALE 3 : 1

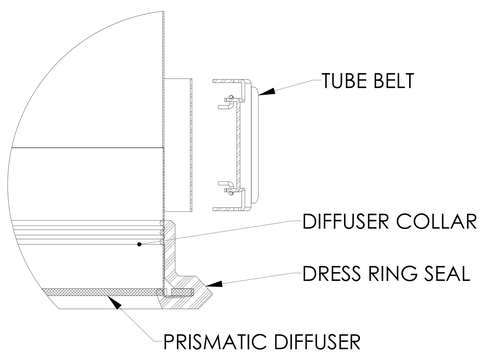

DETAIL C
SCALE 4 : 1

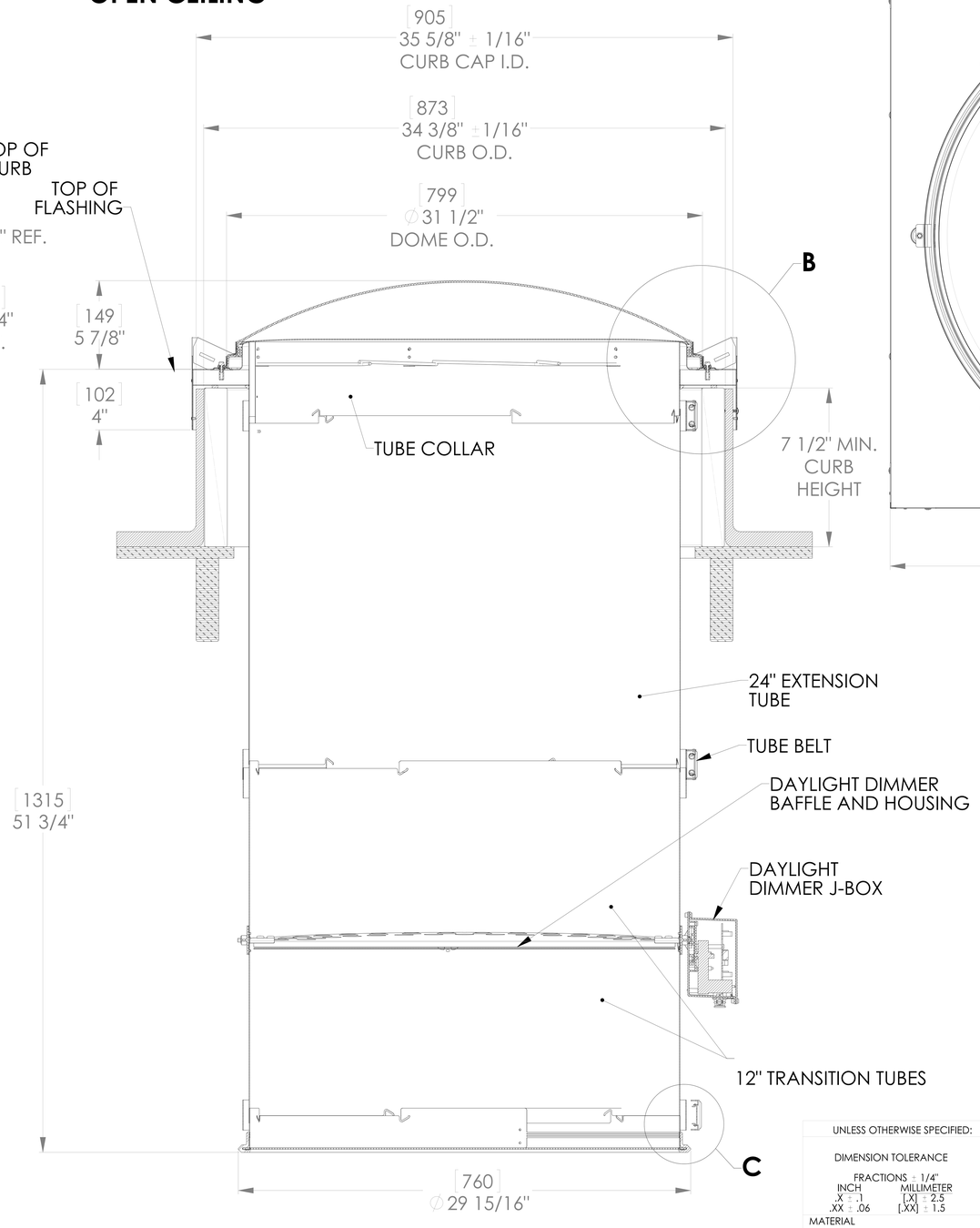

SECTION A-A

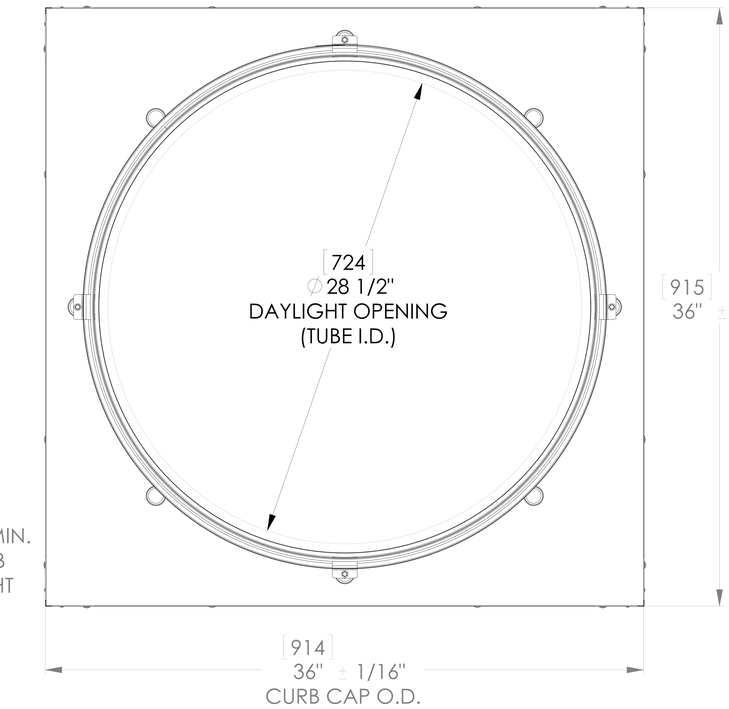

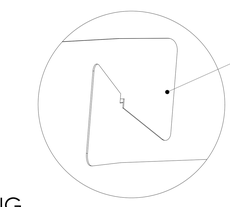

DETAIL E
SCALE 8 : 1

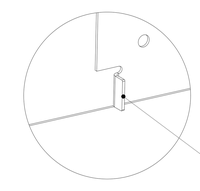

DETAIL D
SCALE 8 : 1

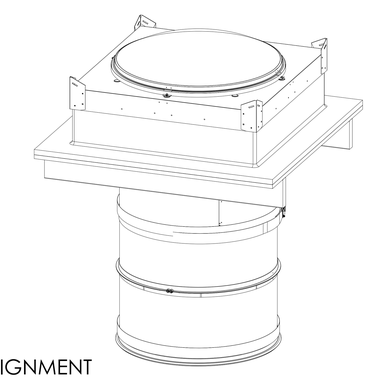

NOTES:

1. STRUCTURAL ELEMENTS (PLYWOOD, RAFTERS, DRYWALL ETC.) BY OTHERS & SHOWN FOR REFERENCE ONLY.
2. DIMENSIONS IN BRACKETS ARE METRIC UNLESS OTHERWISE SPECIFIED.
3. 6" MIN CLEARANCE SHOULD BE MAINTAINED FROM ALL SOLATUBE COMPONENTS AND OTHER PLENUM COMPONENTS.
4. CURB CORNER TO CORNER MEASUREMENT SHALL BE EQUIVALENT TO WITHIN 3/32".

UNLESS OTHERWISE SPECIFIED:
DIMENSION TOLERANCE
FRACTIONS ± 1/4"
INCH .X ± .1 .XX ± .06
MILLIMETER [.X] ± 2.5 [.XX] ± 1.5
MATERIAL
FINISH
DO NOT SCALE DRAWING

SOLATUBE INTERNATIONAL, INC.
COPYRIGHT 2015
WWW.SOLATUBE.COM

DRAWN BY STEVENS — DATE 8/4/15
CHECKED BY -- — DATE --
APPROVED BY -- — DATE --

SOLATUBE
2210 OAK RIDGE WAY
VISTA, CALIFORNIA 92081-8341
PH (760) 597-4400

TITLE: **M74 DS CURB MOUNT OPEN CEILING**

SIZE D — DWG. NO. SM74DS-0-DPPSGFC-E1-D1-B-L2-I — REV 3
SCALE: 1:1 — SHEET 1 OF 1